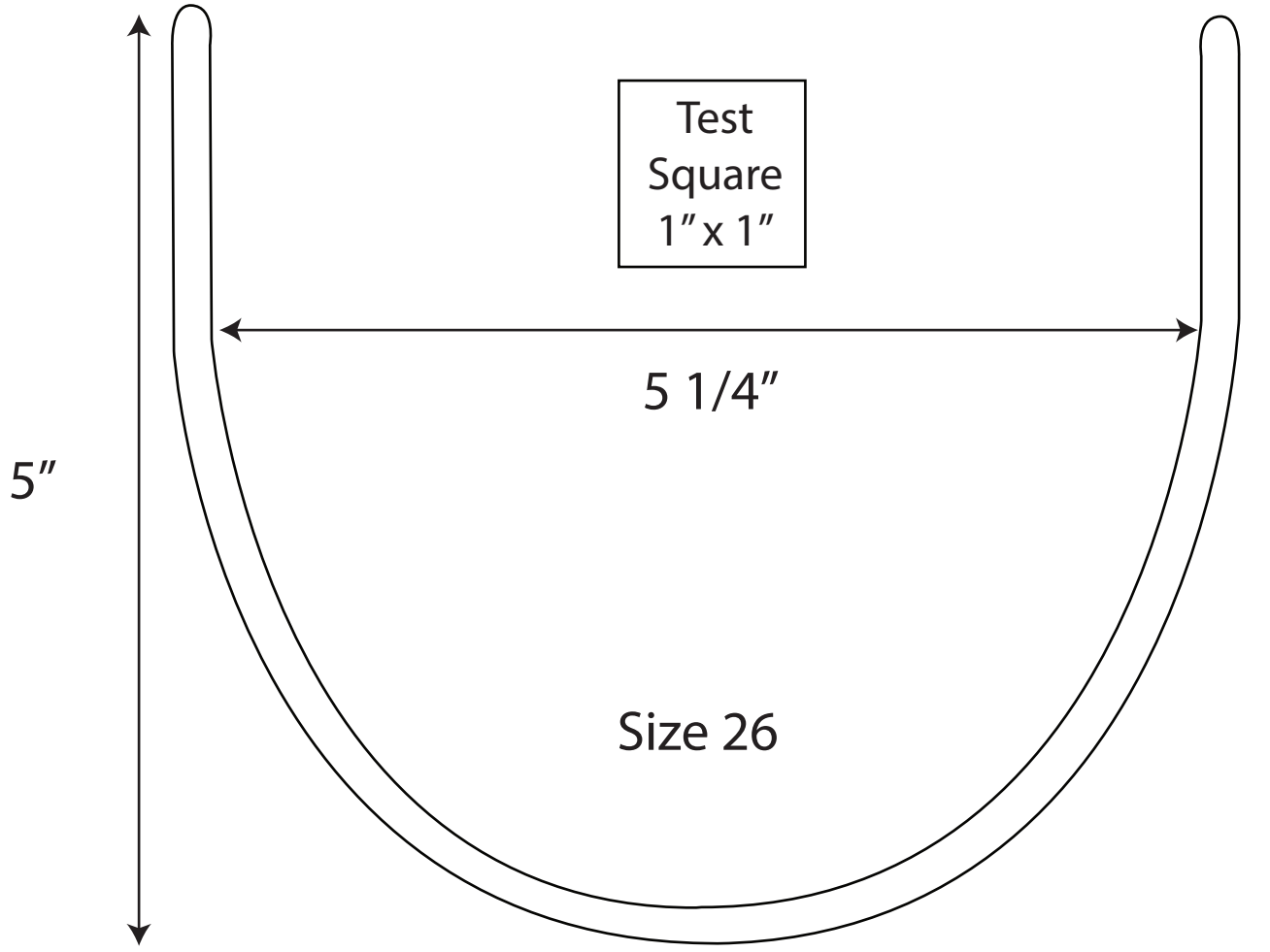
Test
Square
1″ x 1″
5 1/4″
5″
Size 26

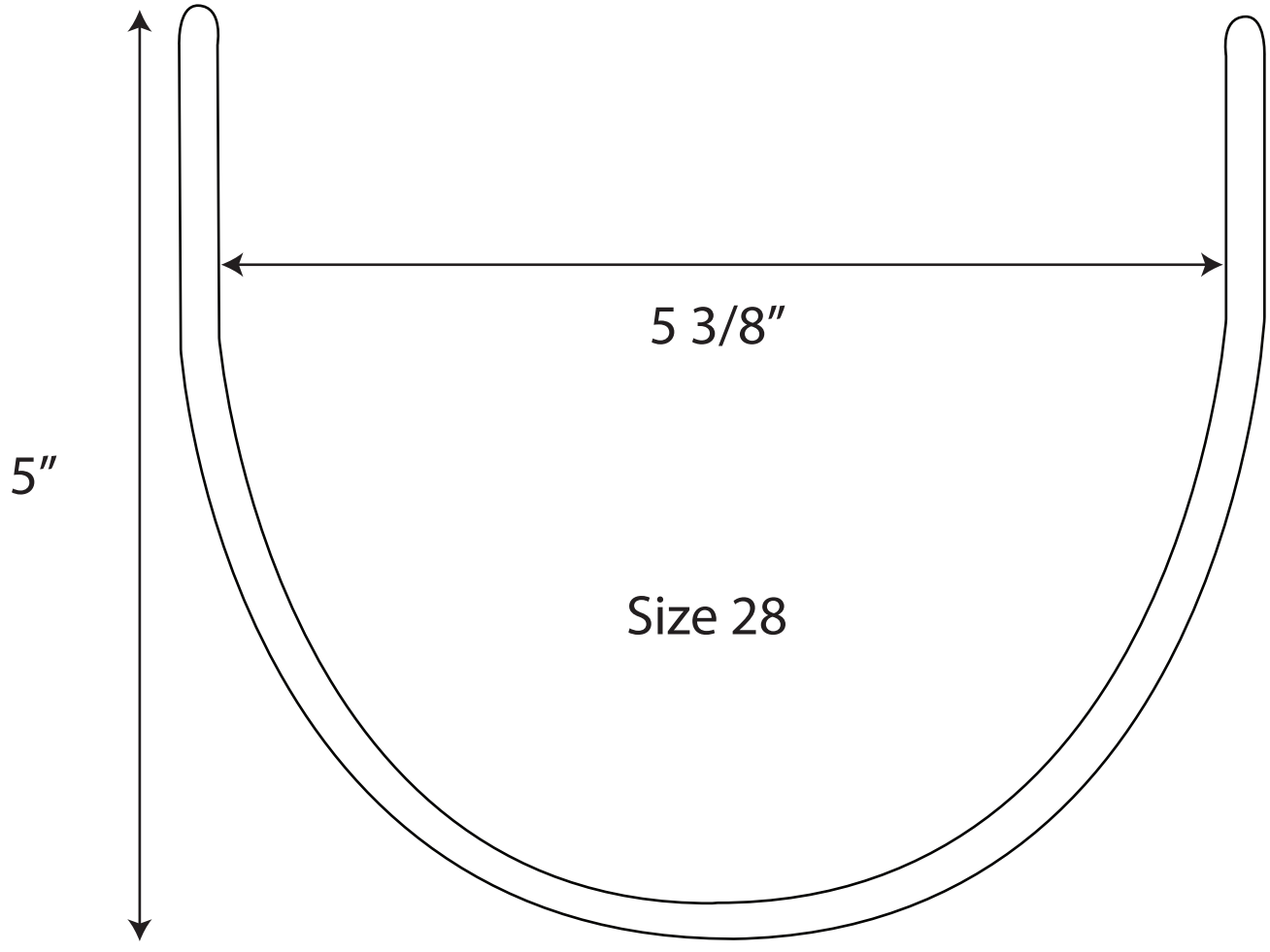
5 3/8″
5″
Size 28

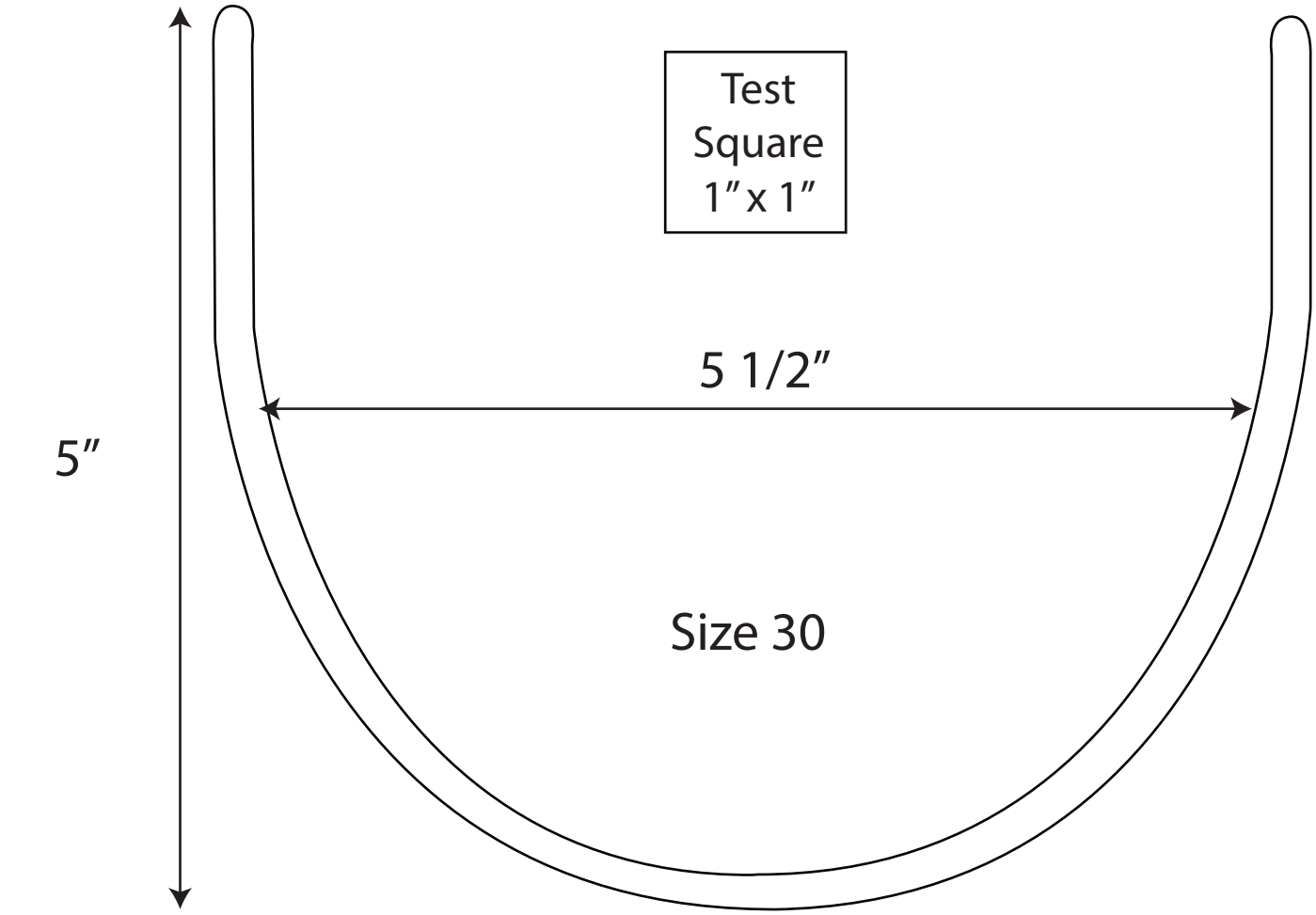
Test
Square
1″ x 1″
5 1/2″
5″
Size 30

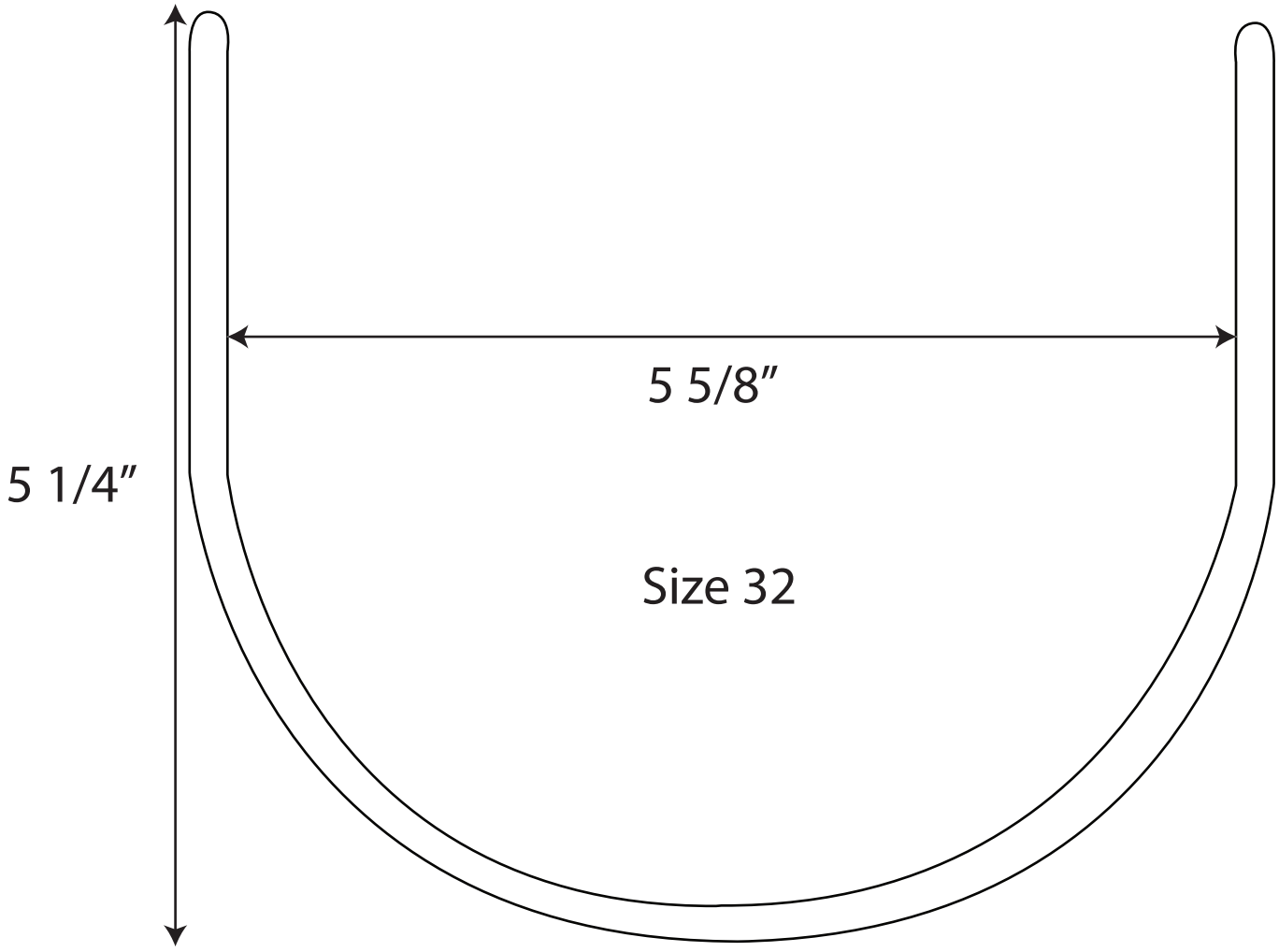
5 5/8″
5 1/4″
Size 32

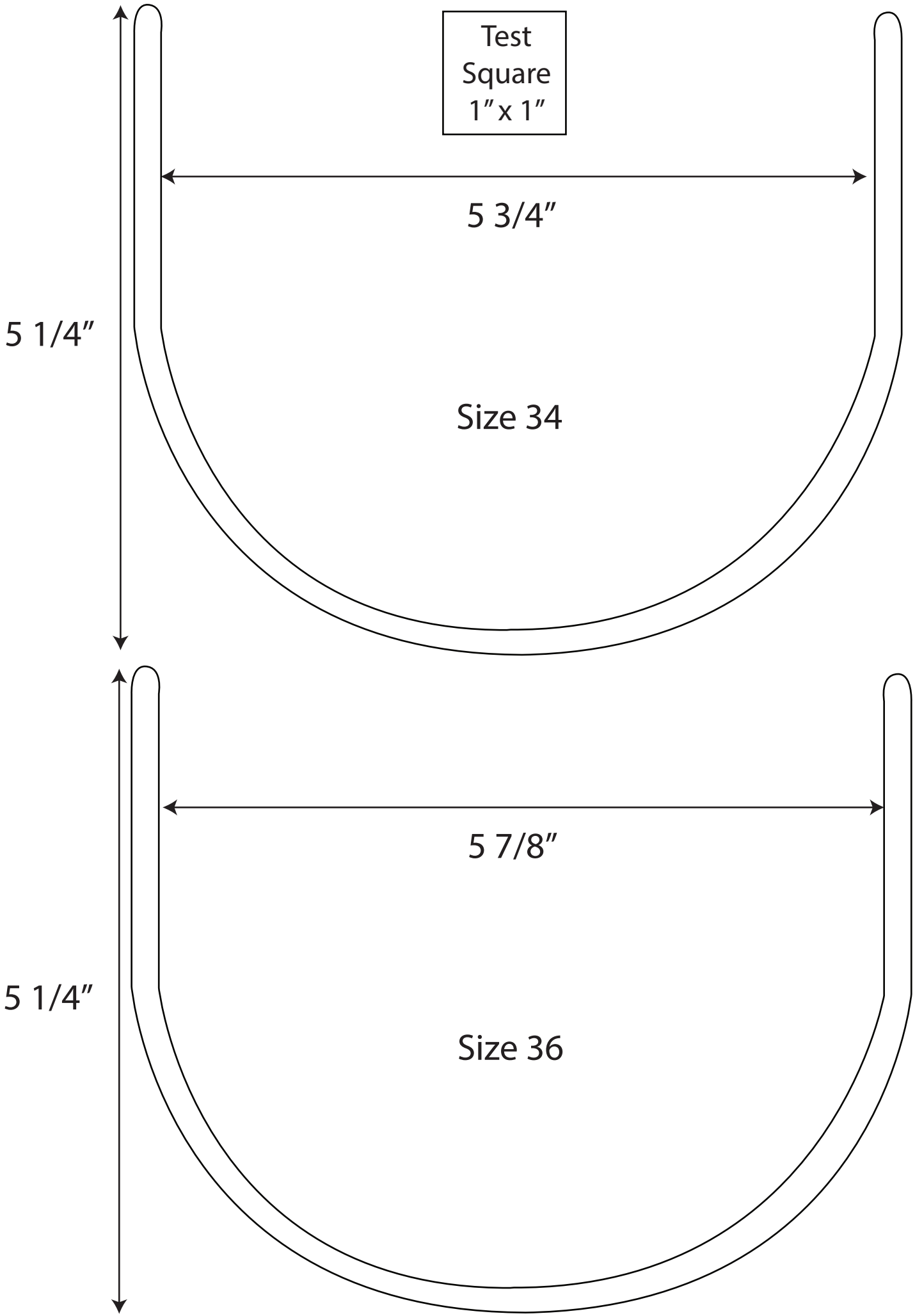
Test
Square
1″ x 1″
5 3/4″
5 1/4″
Size 34
5 7/8″
5 1/4″
Size 36

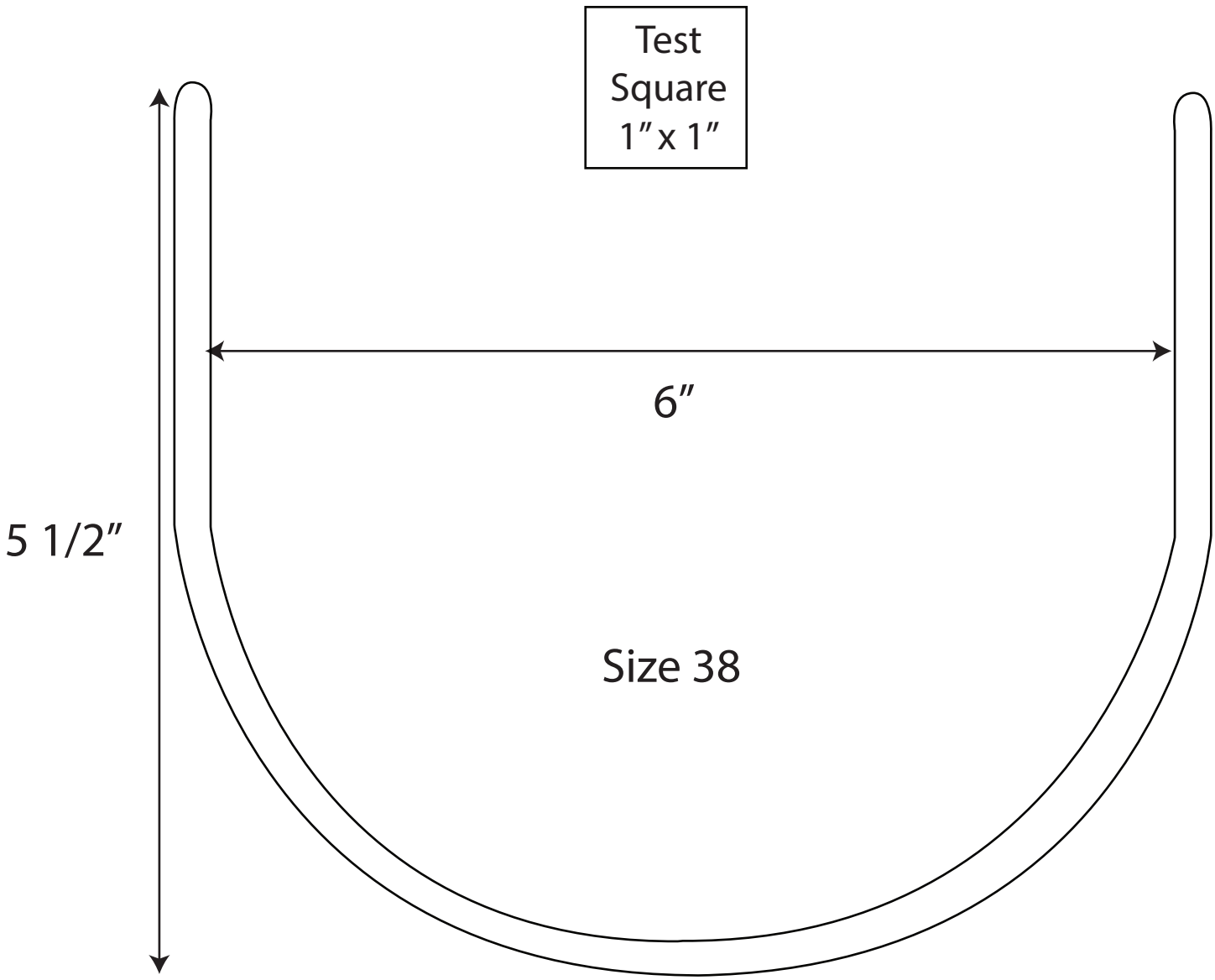
Test
Square
1″ x 1″
6″
5 1/2″
Size 38

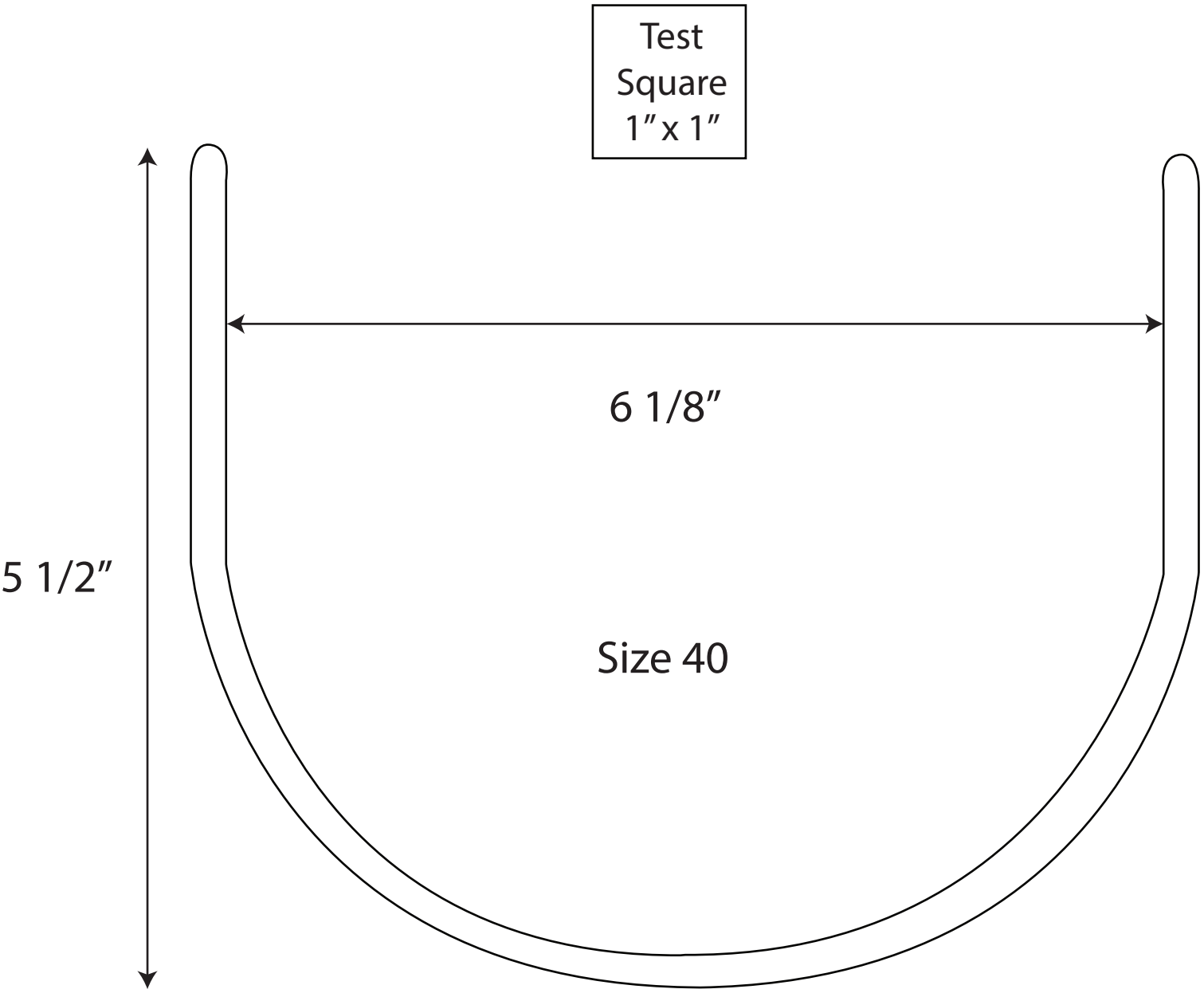
Test
Square
1″ x 1″
6 1/8″
5 1/2″
Size 40

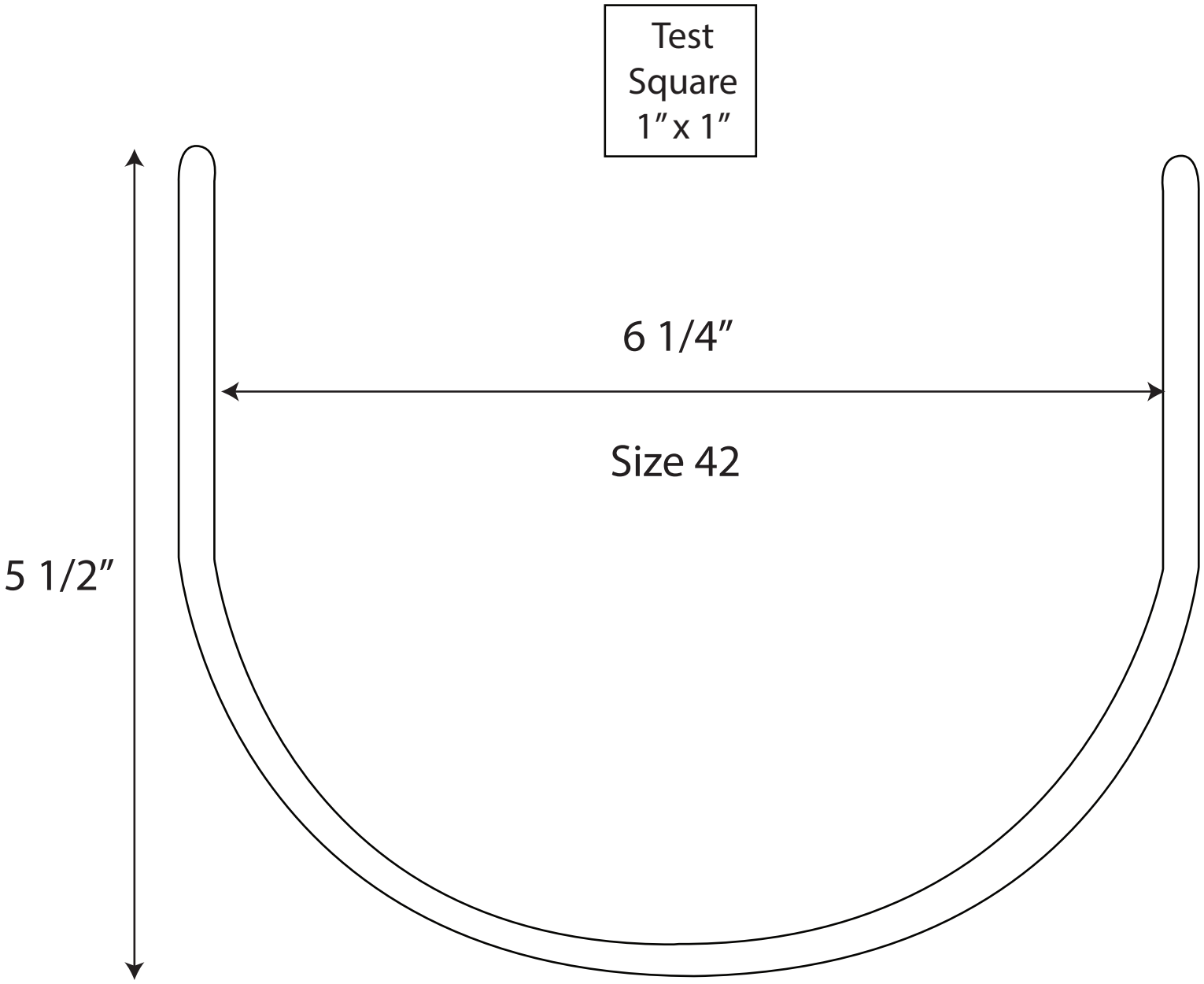
Test
Square
1″ x 1″
6 1/4″
Size 42
5 1/2″

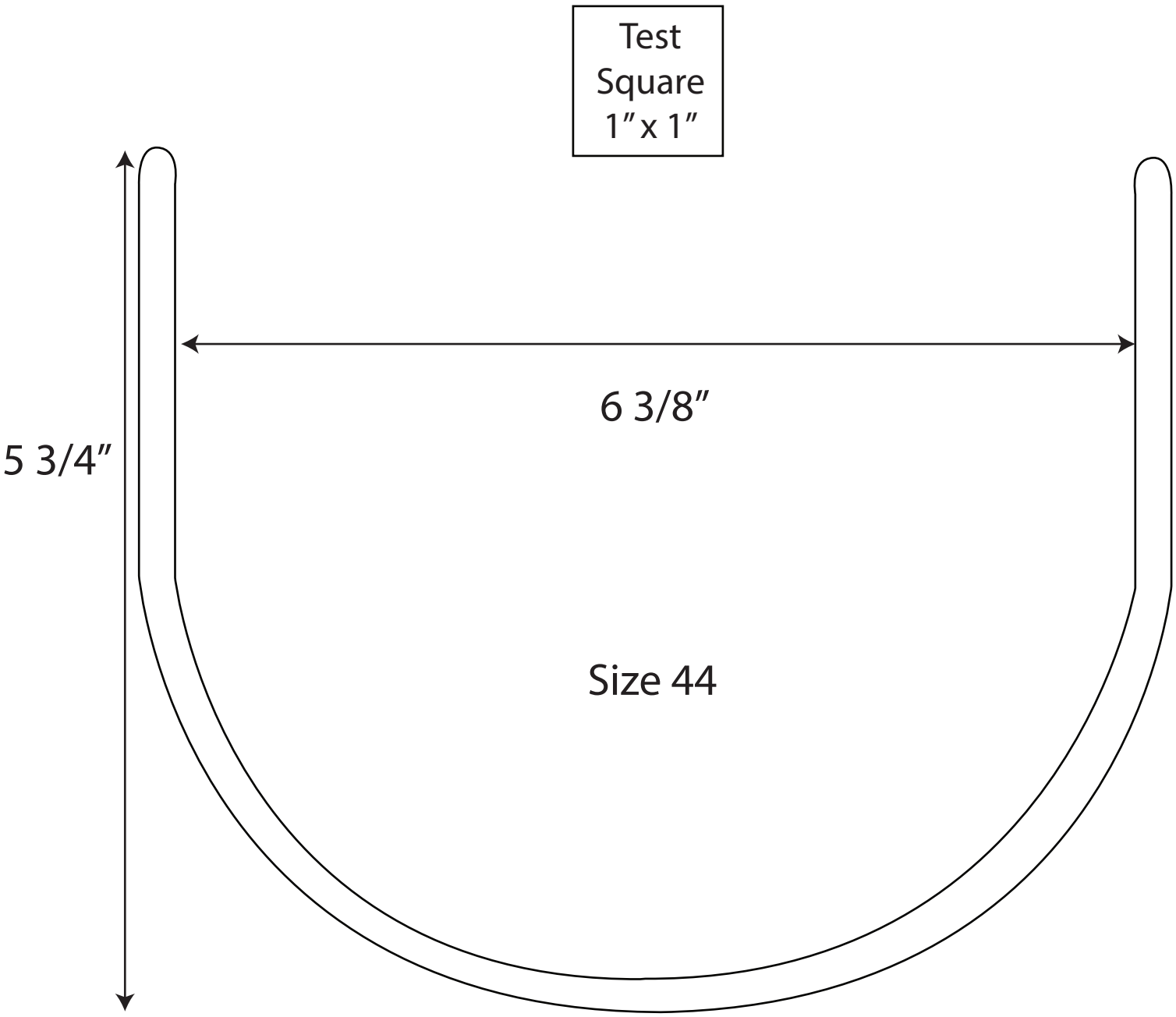
Test
Square
1″ x 1″
6 3/8″
5 3/4″
Size 44

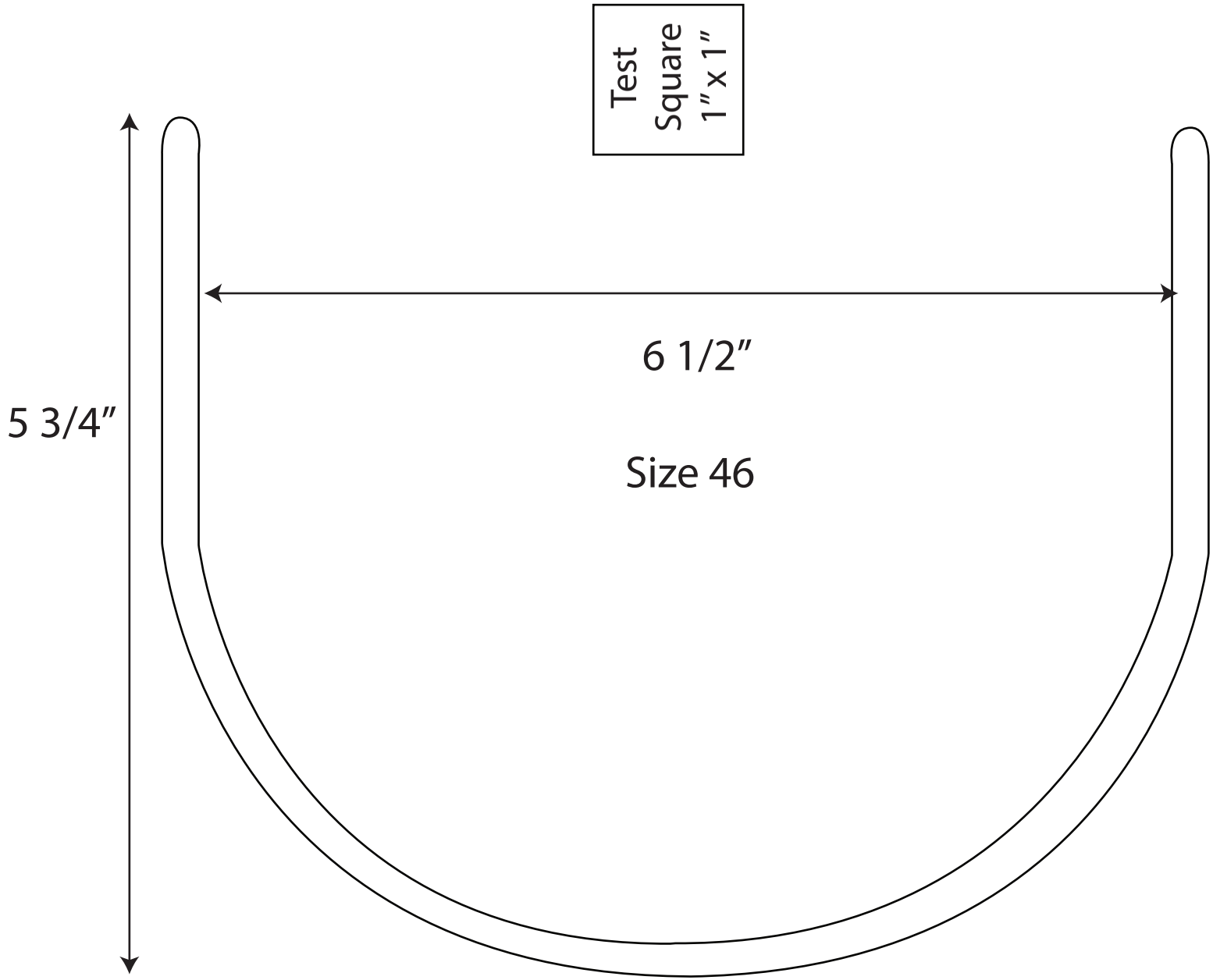
Test Square 1" x 1"
6 1/2"
5 3/4"
Size 46

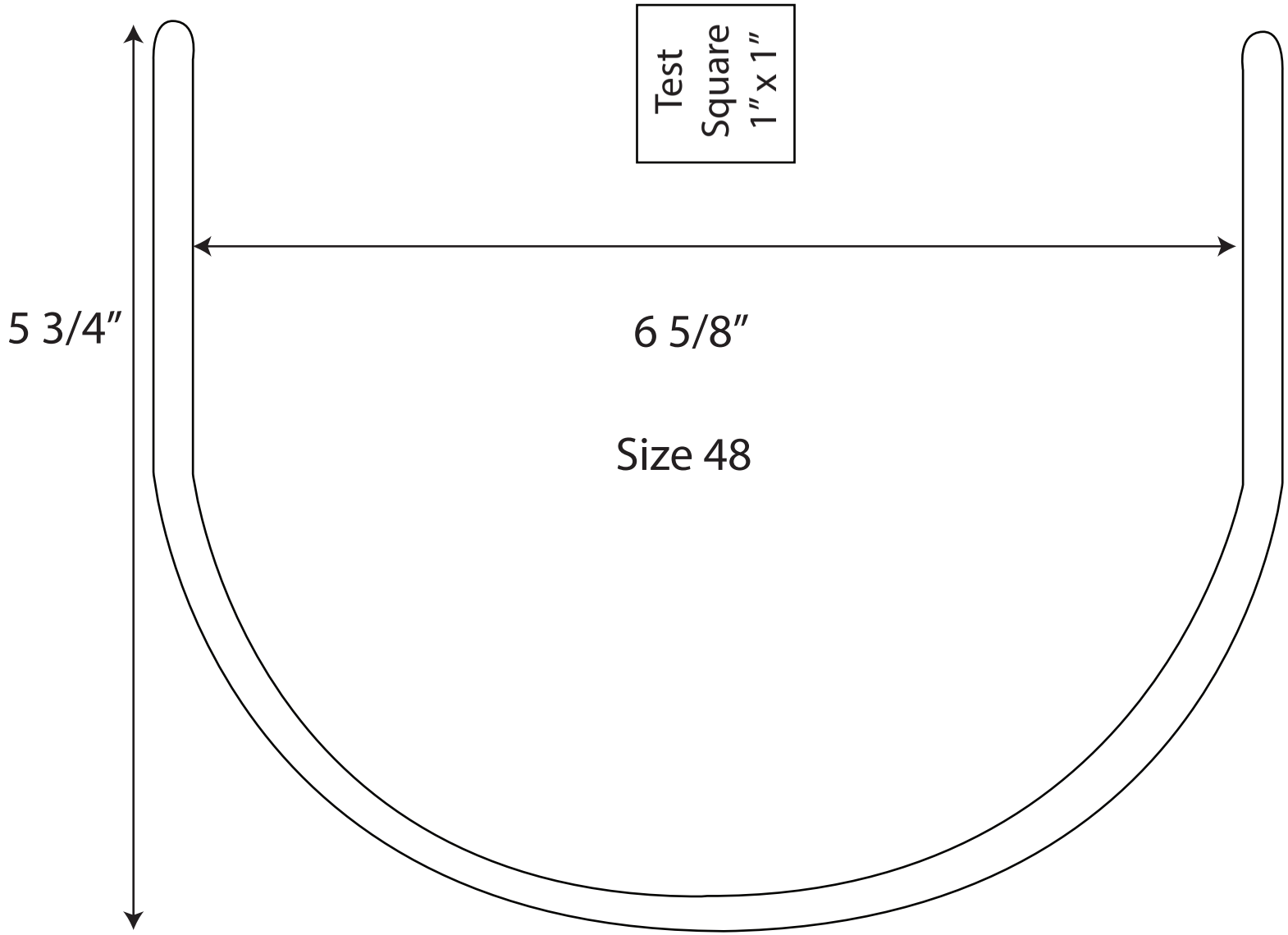
Test Square 1" x 1"
5 3/4"
6 5/8"
Size 48